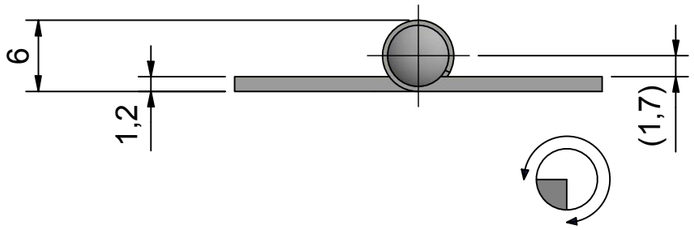

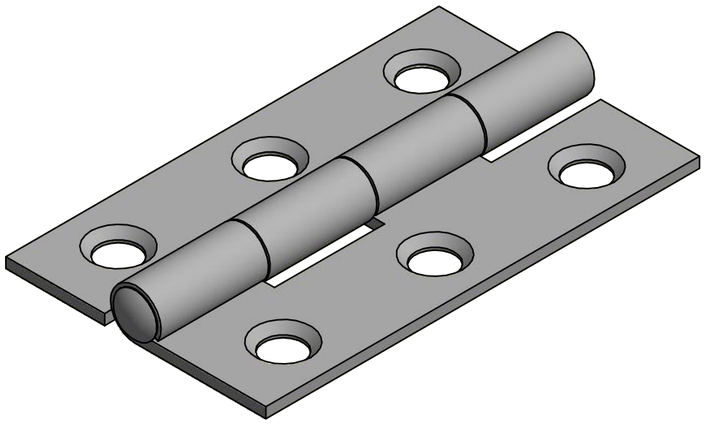

(2 : 1)

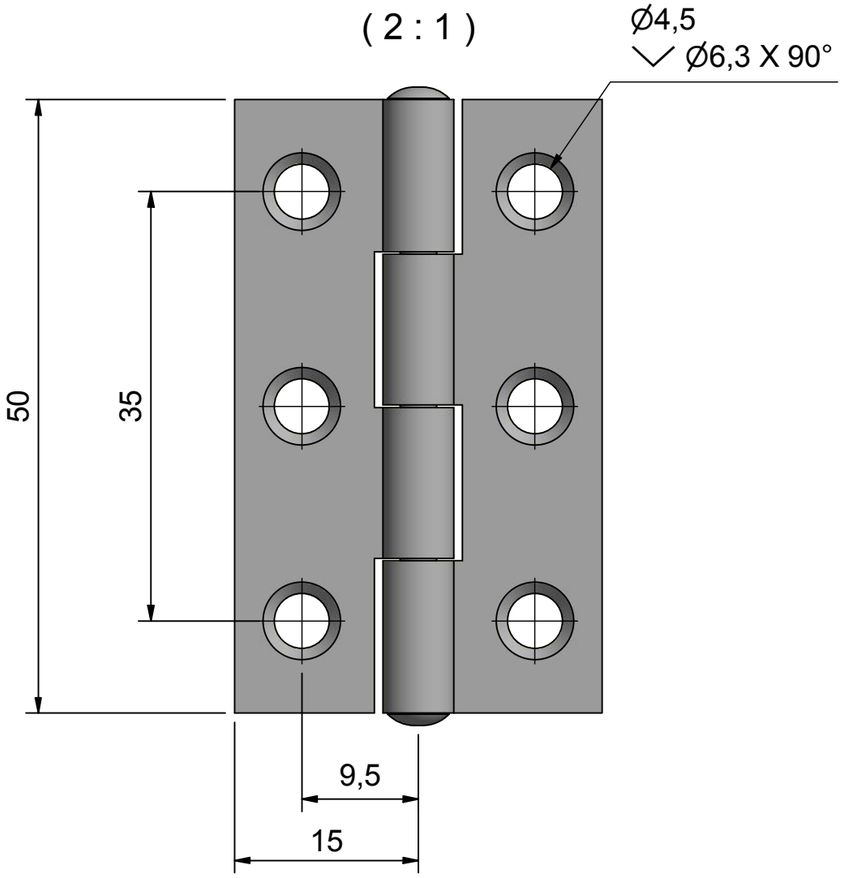

AISI304/Electro polished	Date 191007/HH
Description **Butt hinge 50x30**	Item no. **443430**