Reference 443540 | A3

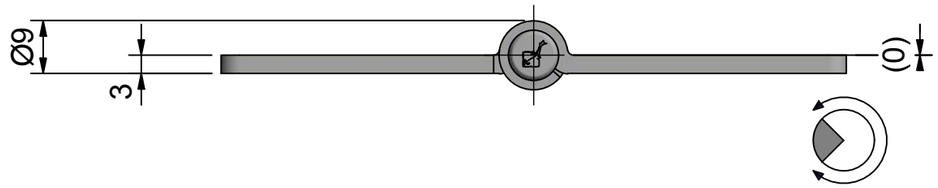

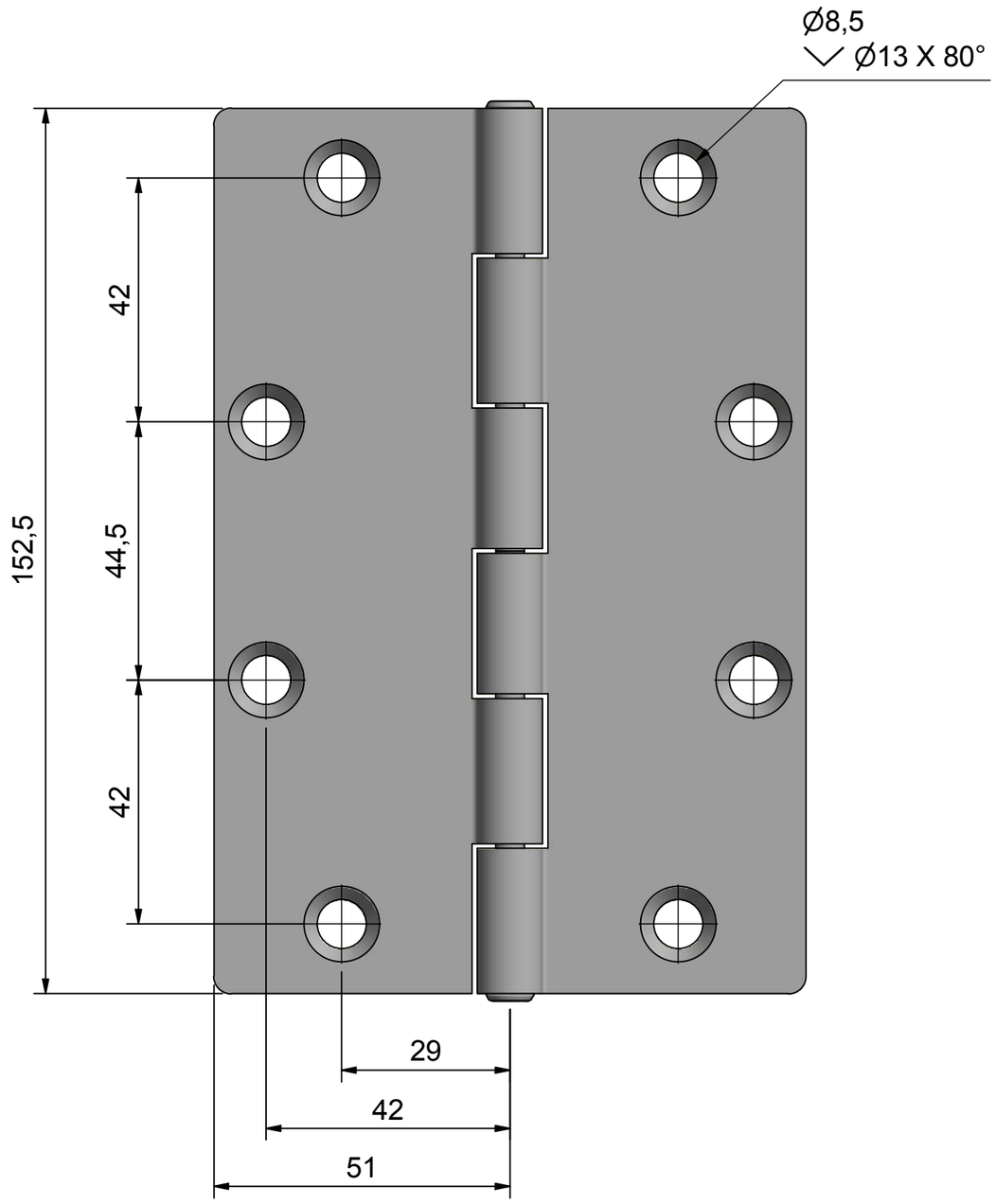

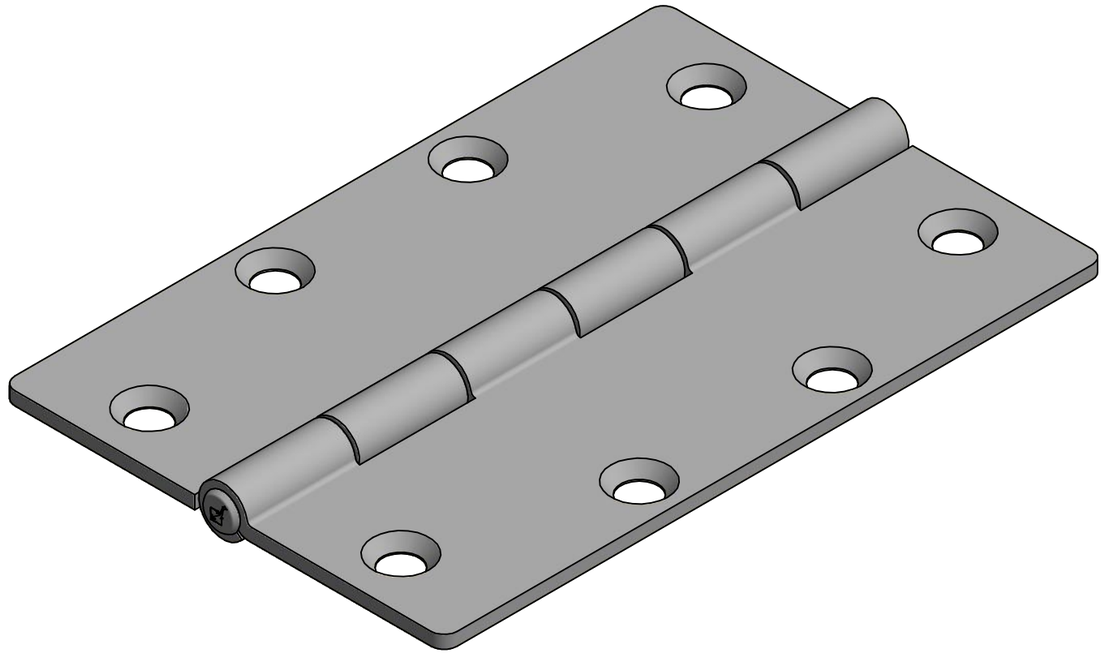

AISI304/Electro polished	Date 190927/HH
Description **Butt hinge 150x100**	Item no. **443540**