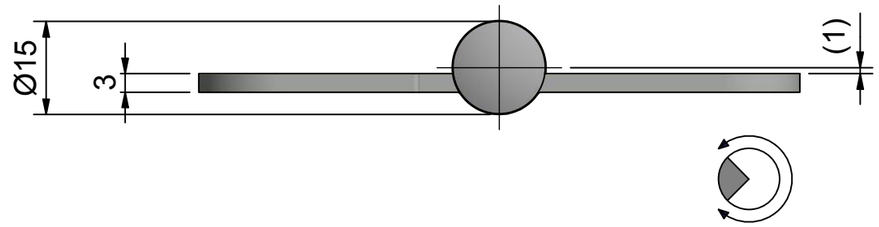

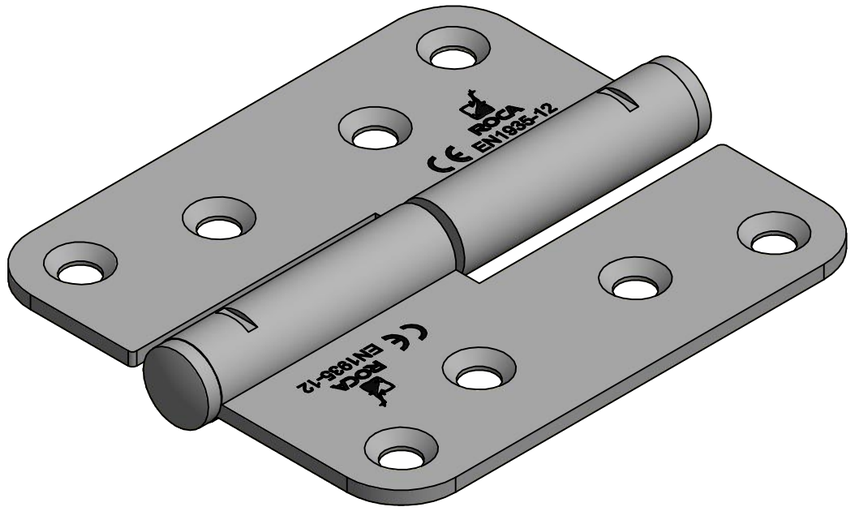

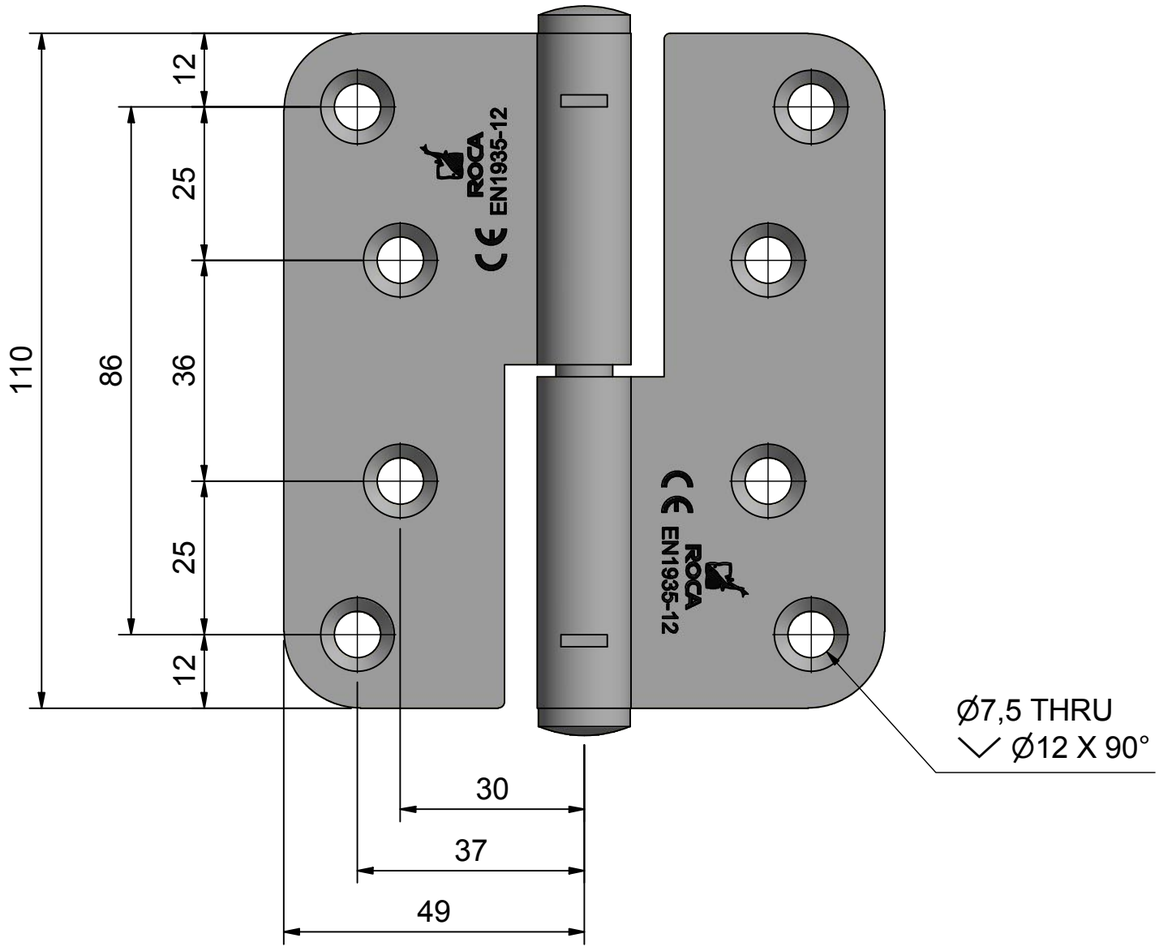

AISI316/Electro polished	Date 191106/HH
Description **Lift off hinge | 3248 left handed**	Item no. **927016**